NFV Tutorial

Managing a Virtual Network Function using SDN and Control Theory

Nabeel Akhtar Ibrahim Matta

Control Theory

Control Theory

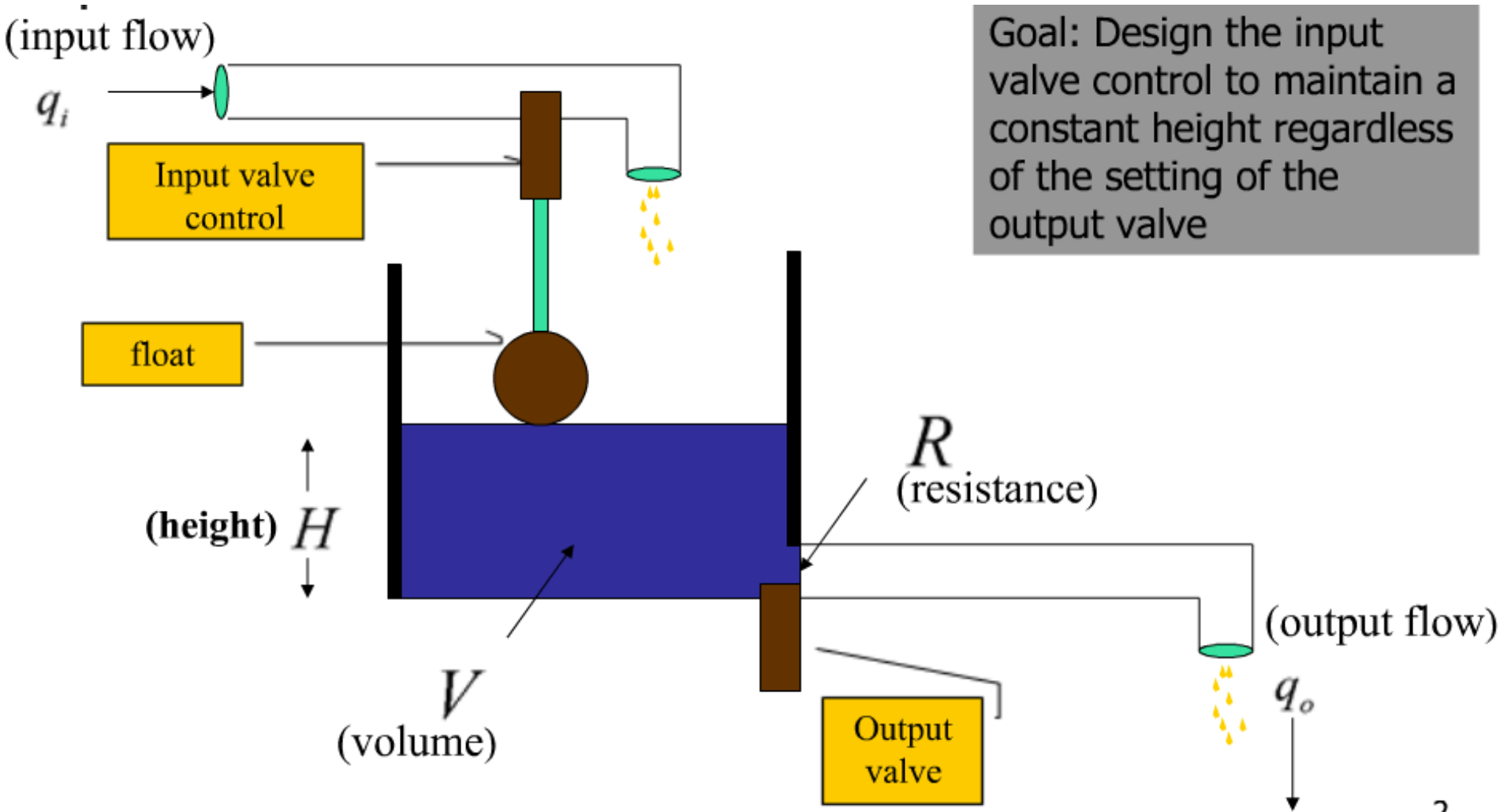

Goal: Design the input valve control to maintain a constant height regardless of the setting of the output valve

Control Theory

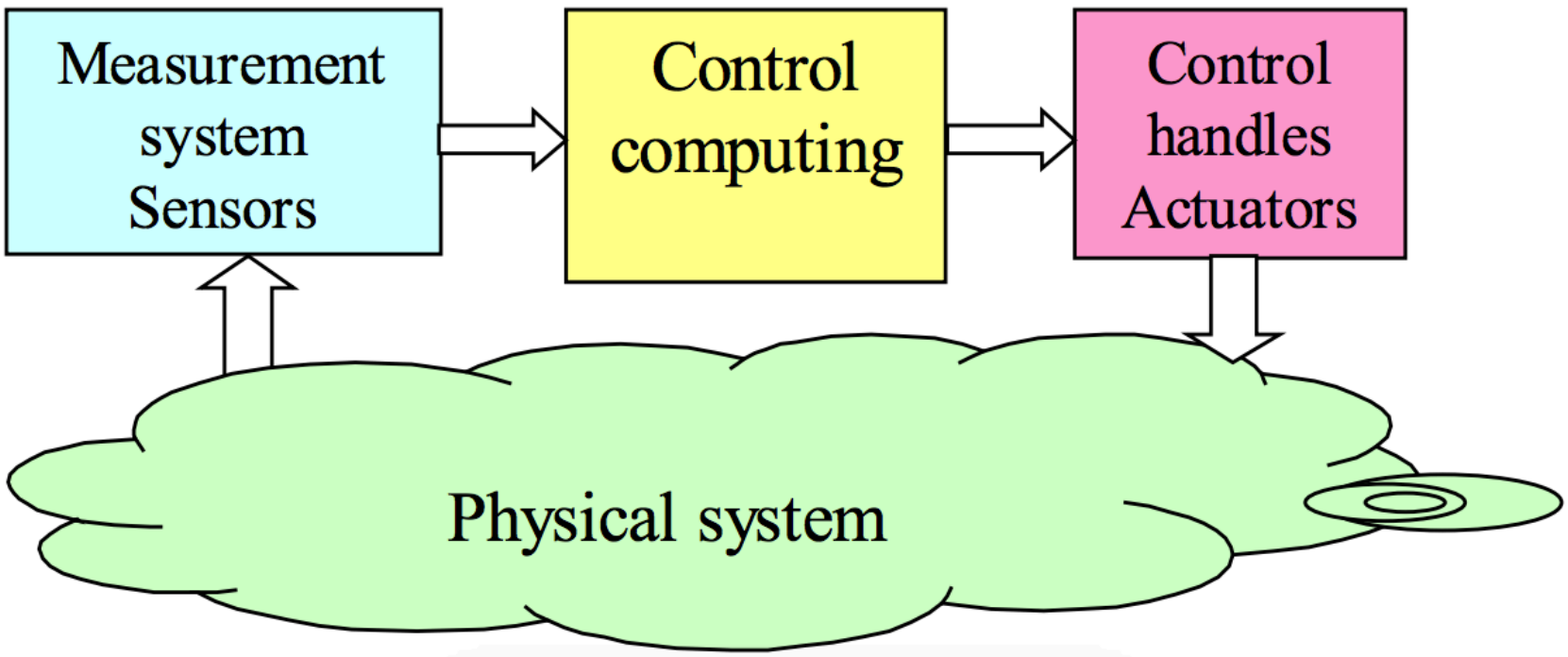

"90% of the real world applications are based on 10% of the existing control methods and theory"

Dimitry Gorinevsky – Stanford University

Examples of Control Theory in CS

- TCP/IP

```
for every loss {
        W = W/2
        }
for every ACK {
        W += 1/W
        }
```

$$\dot{x} = \frac{1-q}{\tau^2} - \frac{1}{2} q x^2$$

- x - transmission rate
- τ - round trip time
- q - loss probability

  – Analysis and systematic design was developed some 20 years later

- QoS in Caching
- Apache QoS differentiation
- …

Managing NFV using SDN & Control Theory

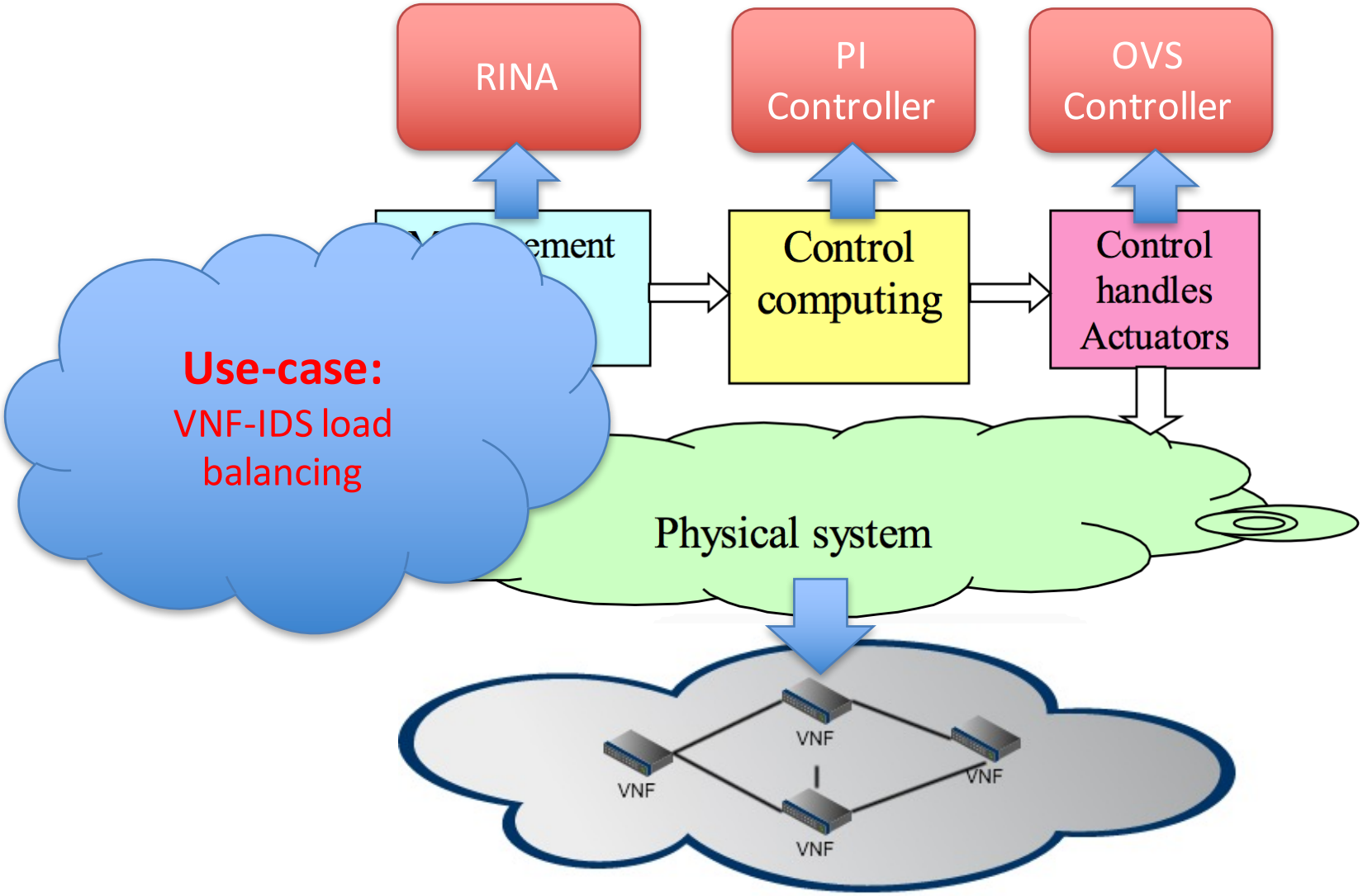

System Overview

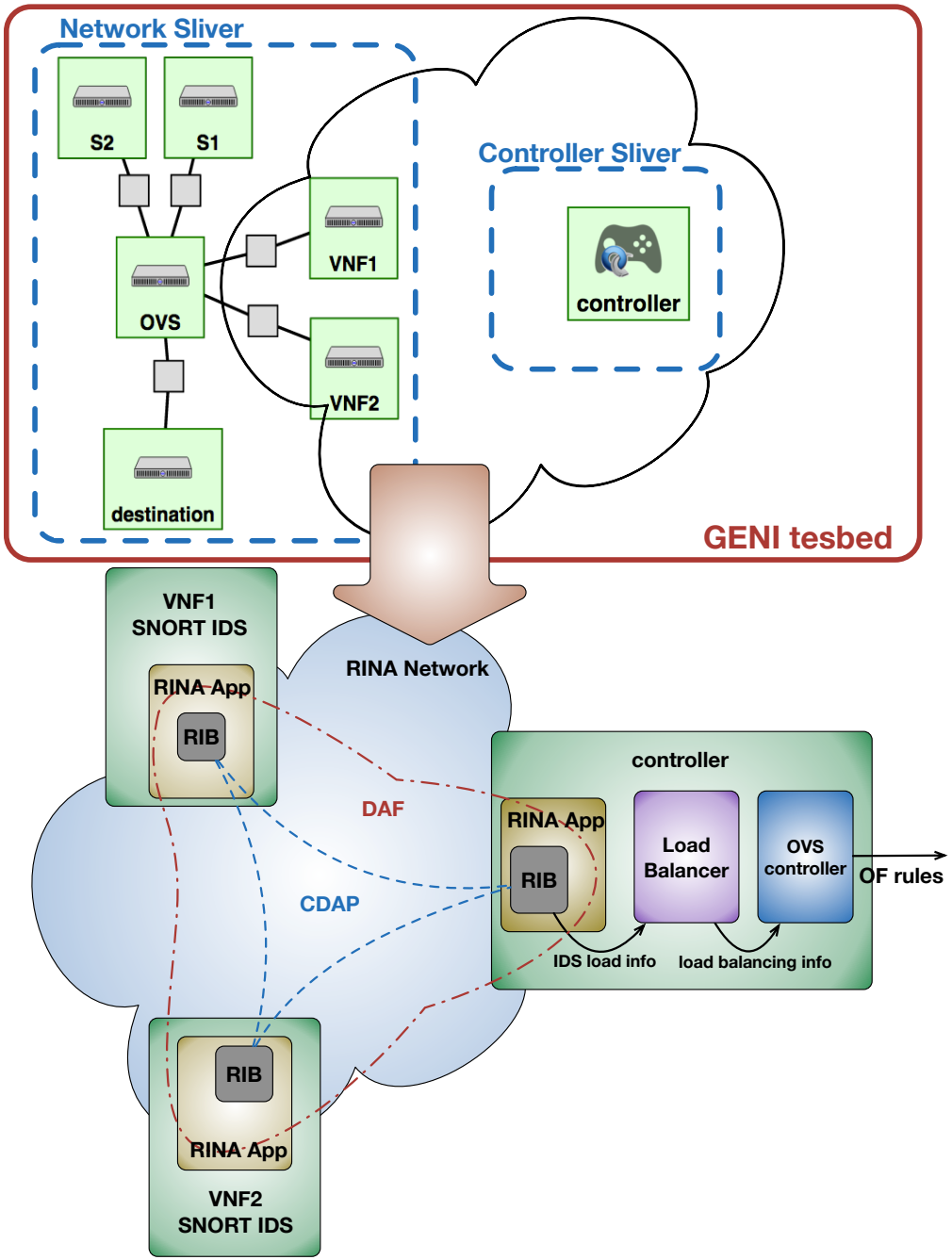

GENI Test-bed

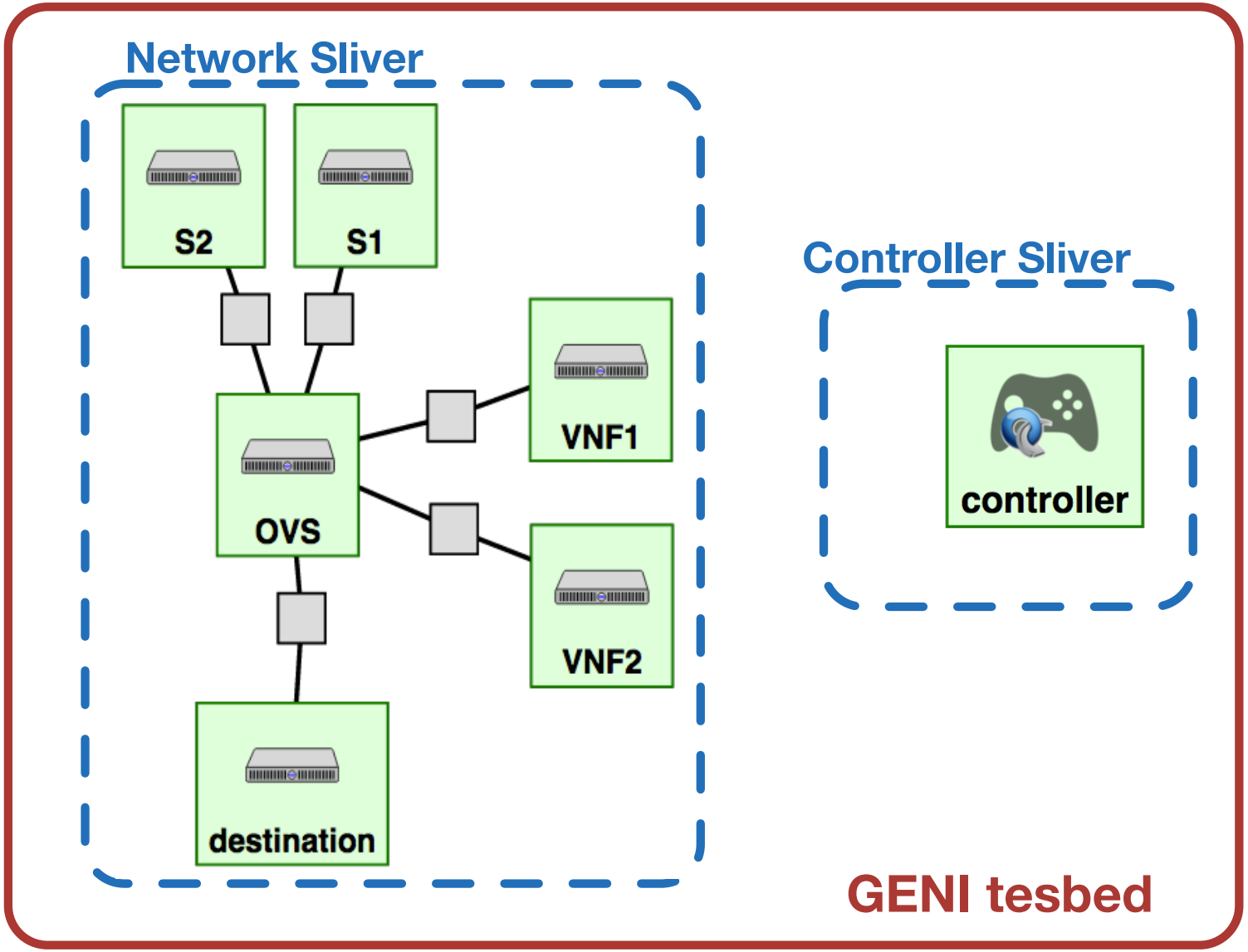

Network Traffic

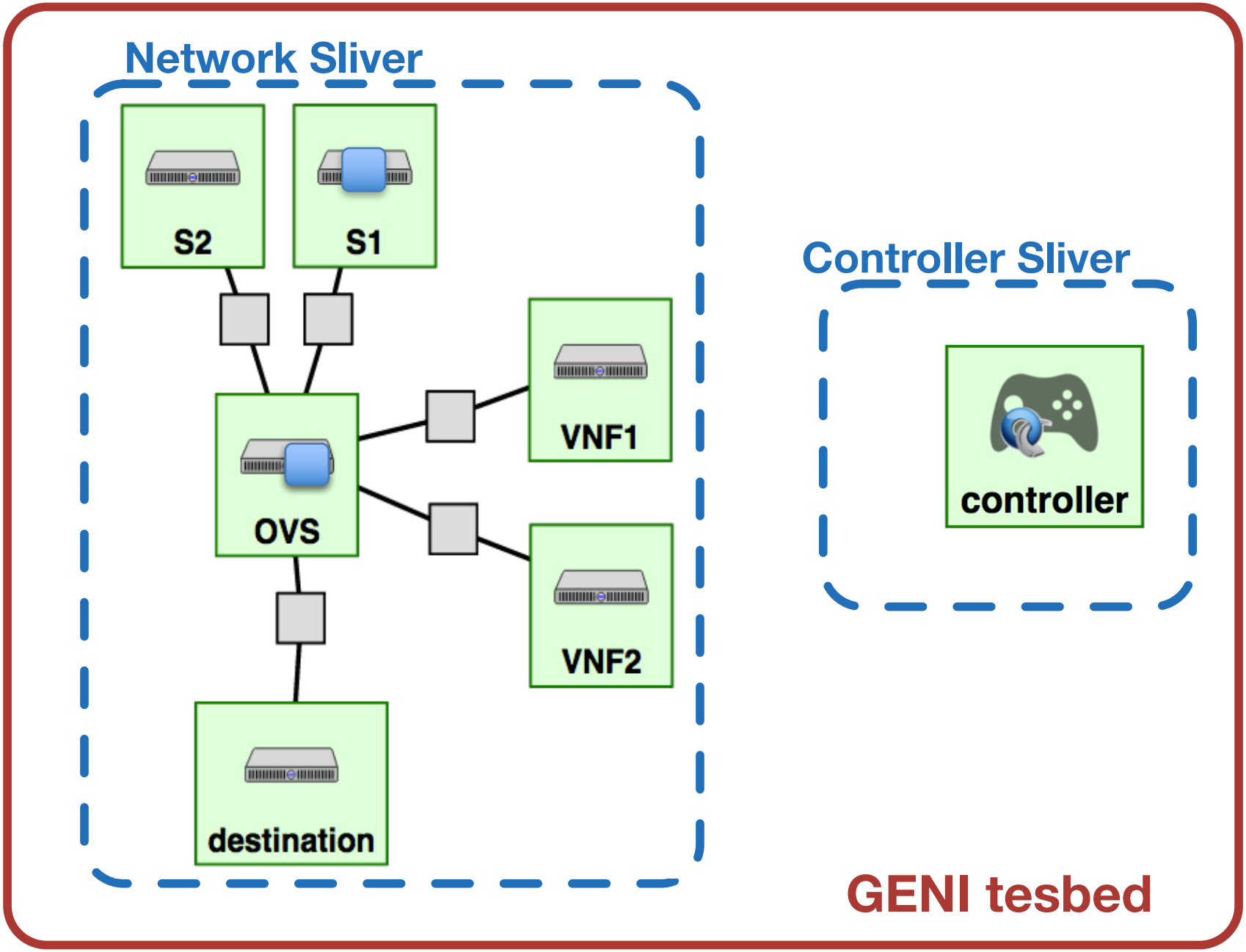

Network Traffic

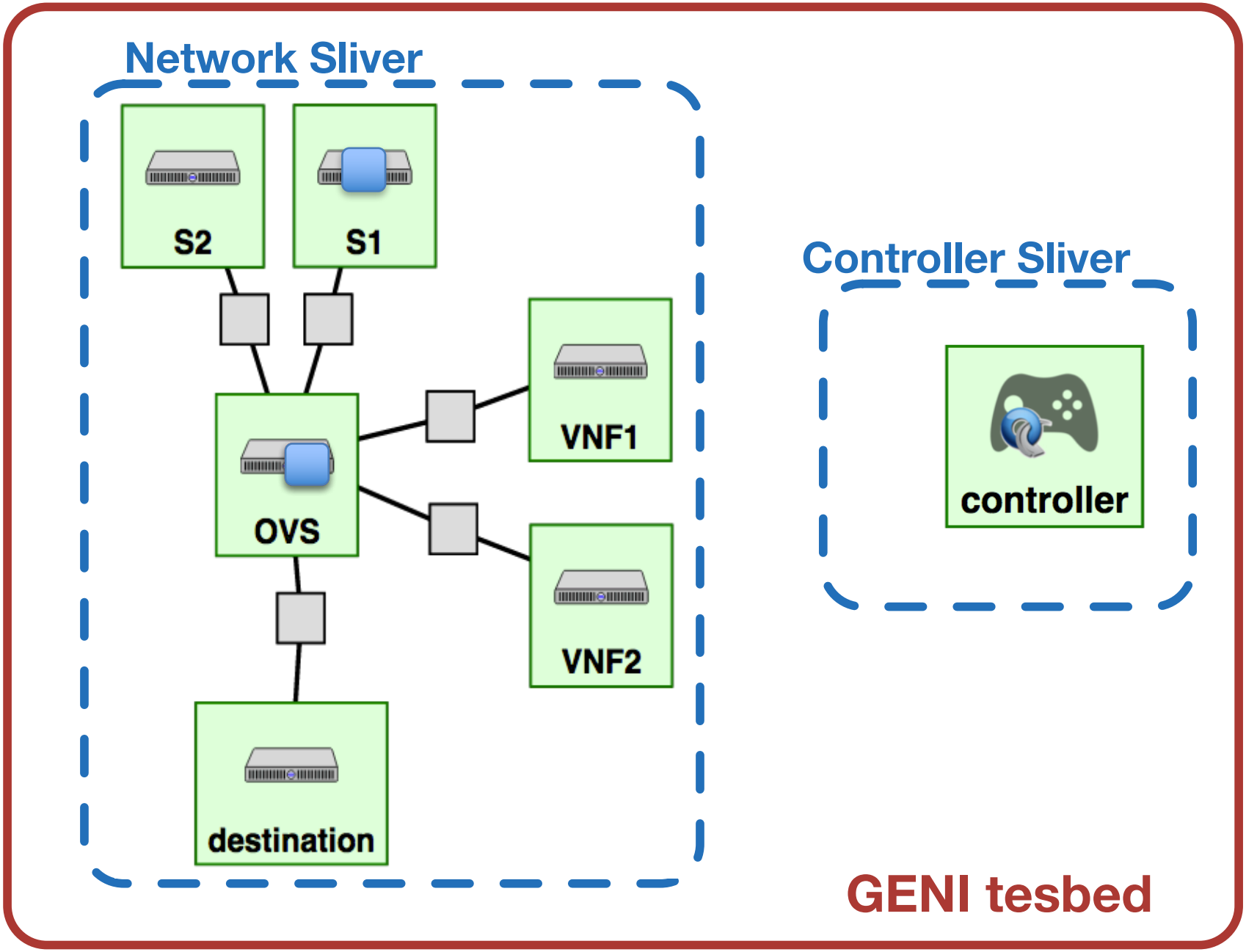

Snort as IDS

- Open source IDS system widely deployed
- InfoWorld's Open Source Hall of Fame as one of the "greatest open source software of all time”
- Protocol analysis, content searching and content matching

RINA

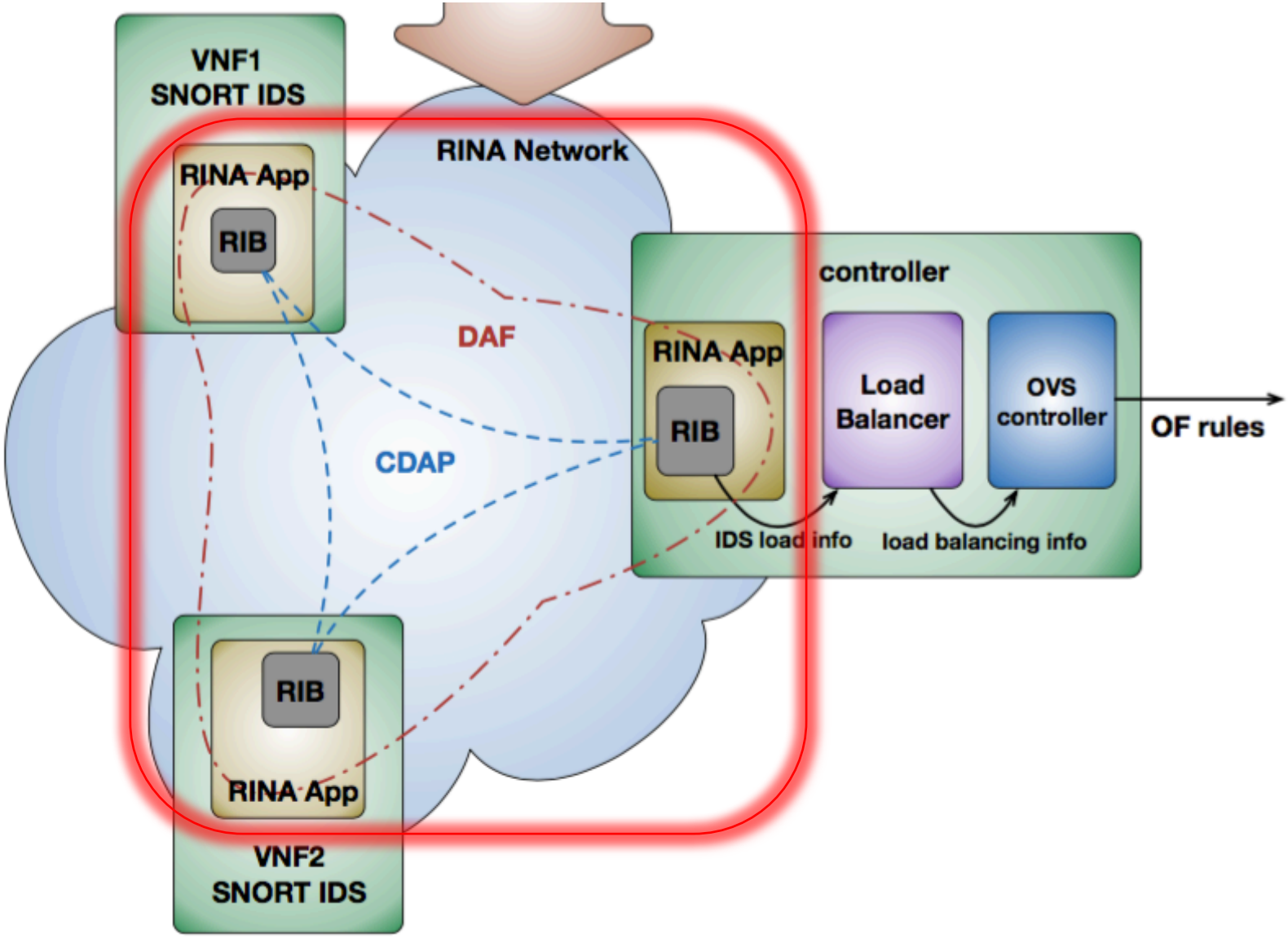
VNF1
SNORT IDS
RINA App
RIB
RINA Network
DAF
CDAP
controller
RINA App
RIB
Load
Balancer
OVS
controller
OF rules
IDS load info
load balancing info
RIB
RINA App
VNF2
SNORT IDS

Recursive InterNetwork Architecture (RINA)

- Clean slate Future Internet Architecture
- Networking is Inter-process communication (IPC)
- DIF (Distributed IPC Facility) – processes cooperating to provide IPC
- DAF – processes cooperating to perform a certain function

http://csr.bu.edu/rina/

Controller

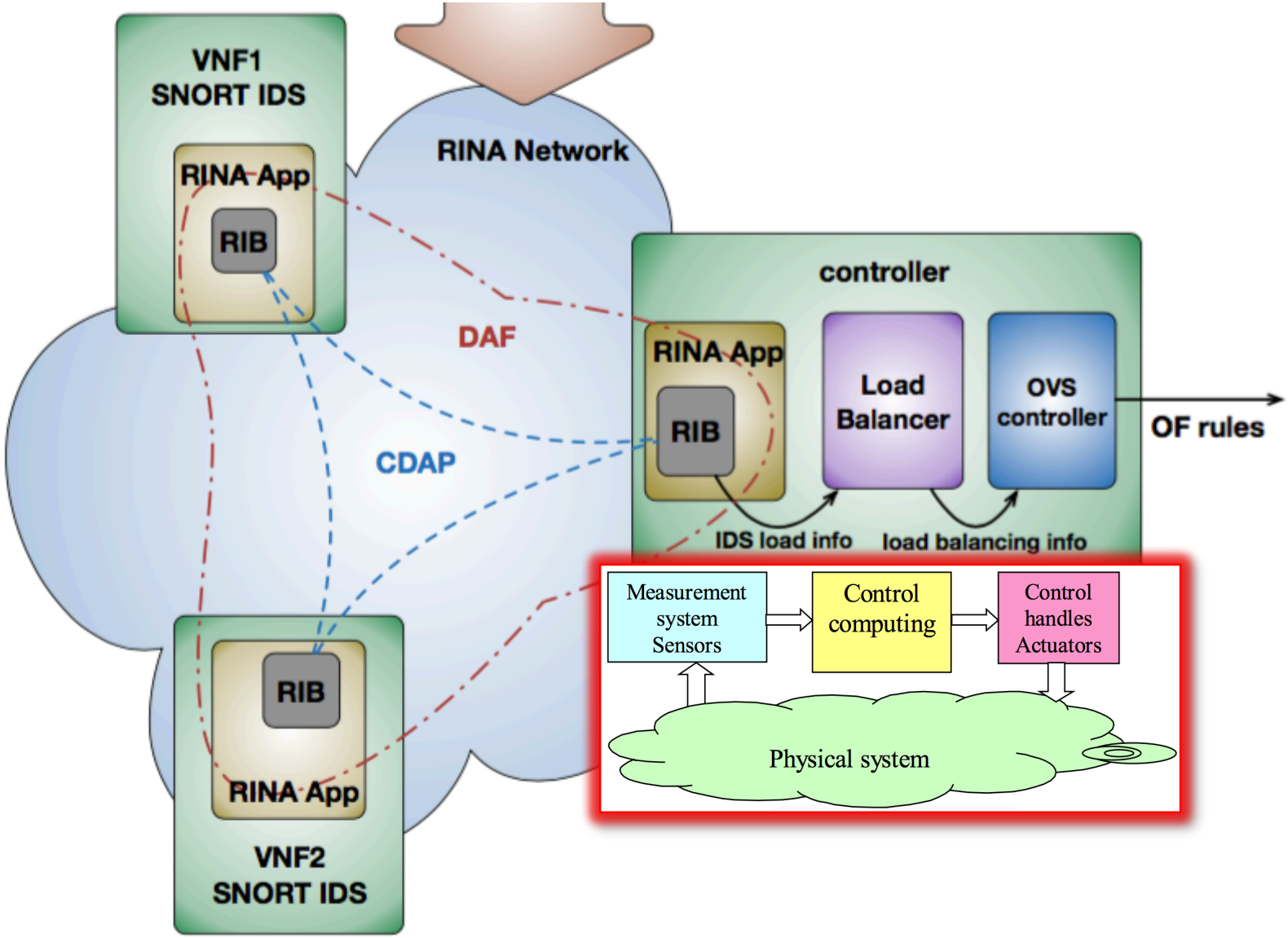
VNF1
SNORT IDS
RINA App
RIB
RINA Network
DAF
CDAP
controller
RINA App
RIB
Load
Balancer
OVS
controller
OF rules
IDS load info
load balancing info
Measurement
system
Sensors
Control
computing
Control
handles
Actuators
Physical system
RIB
RINA App
VNF2
SNORT IDS

Proportional Integral (PI) Controller

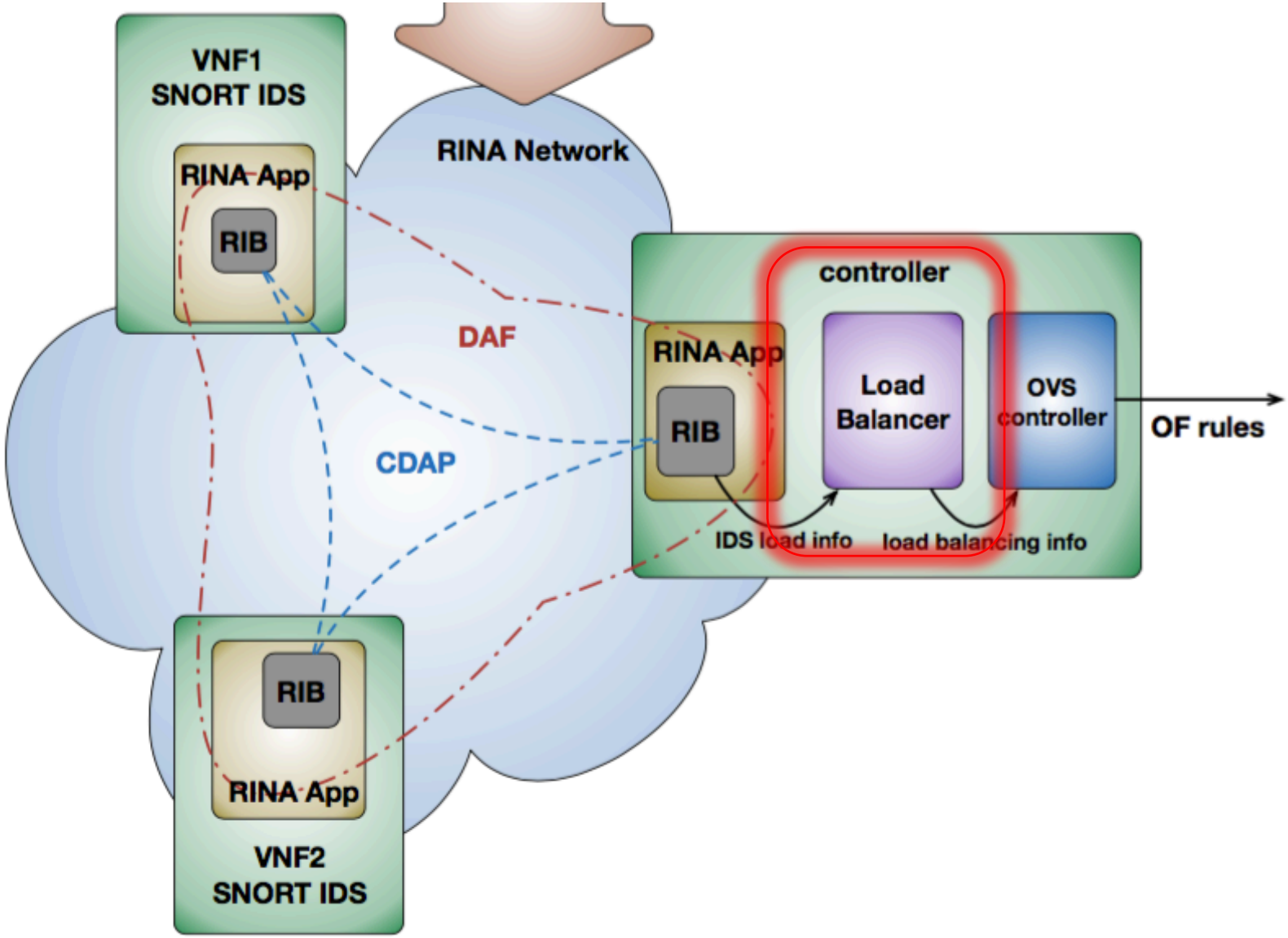

Proportional Integral (PI) Controller

$$x(t) = \max[0, \min[1, x(t-1) + K(\frac{L(t)}{T} - 1)]]$$

$x(t)$: ratio of traffic diverted to VNF2 at time t

$L(t)$: load on VNF1

T: target load on VNF1

Algorithm 1 PI controller

Input: $IDS_{load}.txt$
Output: $x(t)$

```
T = 0.5
x(t − 1) = 0.0
x(t) = 0.0
K = 0.2
while True do
    L(t) = getLoad(IDS_load.txt);
    x(t) = max[0, min[1, x(t − 1) + K(L(t)/T − 1]];
    write(t, x(t));
end while
```

PI-based OVS Controller

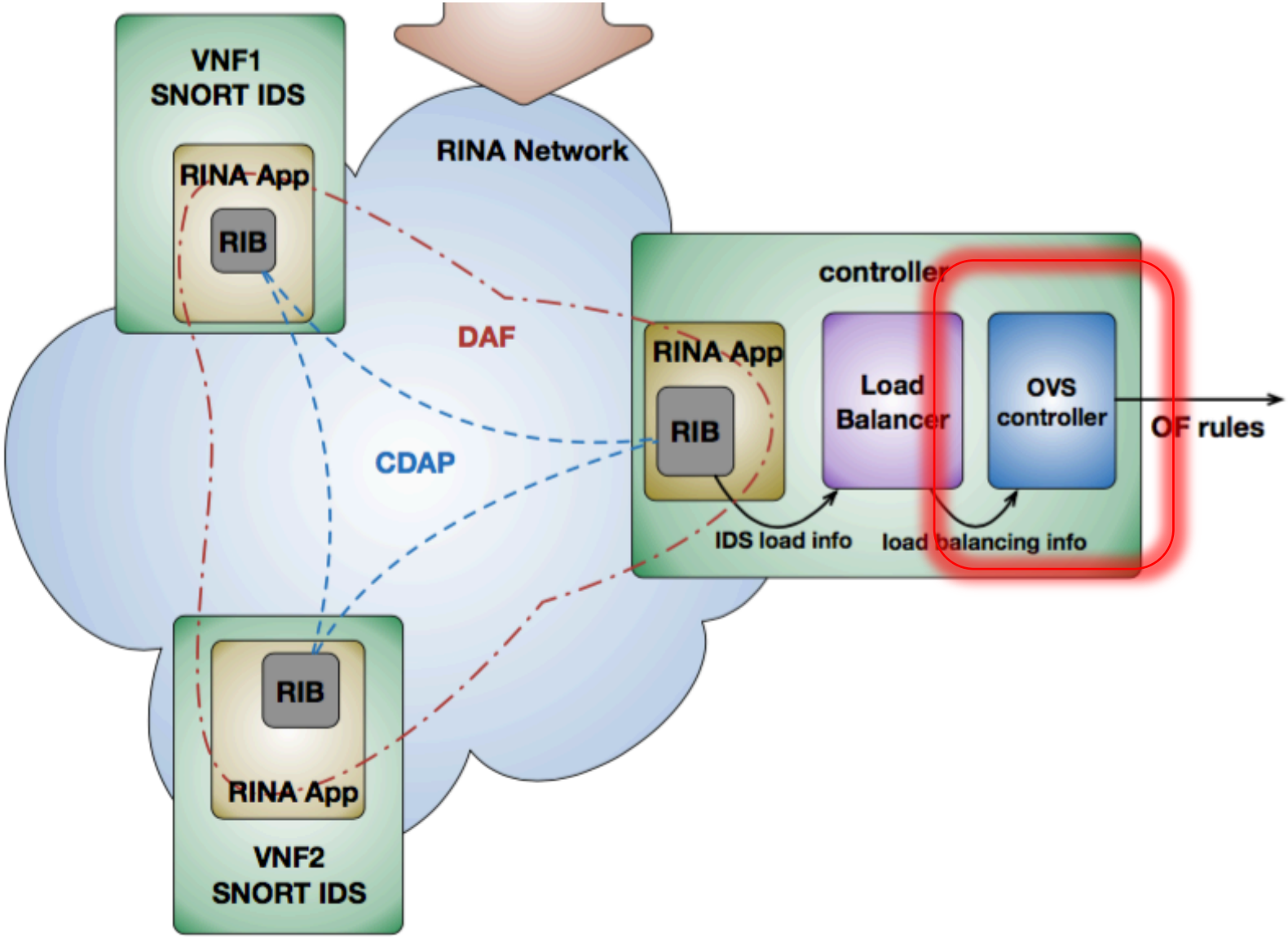

PI-based OVS Controller

Algorithm 2 PI-based OVS controller

Input: $Flows,\ x(t)$

```
for all f in Flows do
    random = generateRandom();
    if random > x(t) then
        vnfSelected = IDS1;
    else
        vnfSelected = IDS2;
    end if
    sendFlow(f, vnfSelected);
end for
```

Round Robin based OVS Controller

Algorithm 3 Round Robin based OVS controller

Input: $Flows$

```
vnfSelected = IDS1
for all f in Flows do
    if vnfSelected == IDS1 then
        vnfSelected = IDS2;
    else
        vnfSelected = IDS1;
    end if
    sendFlow(f, vnfSelected);
end for
```

Round Robin vs PI Control based load balancer

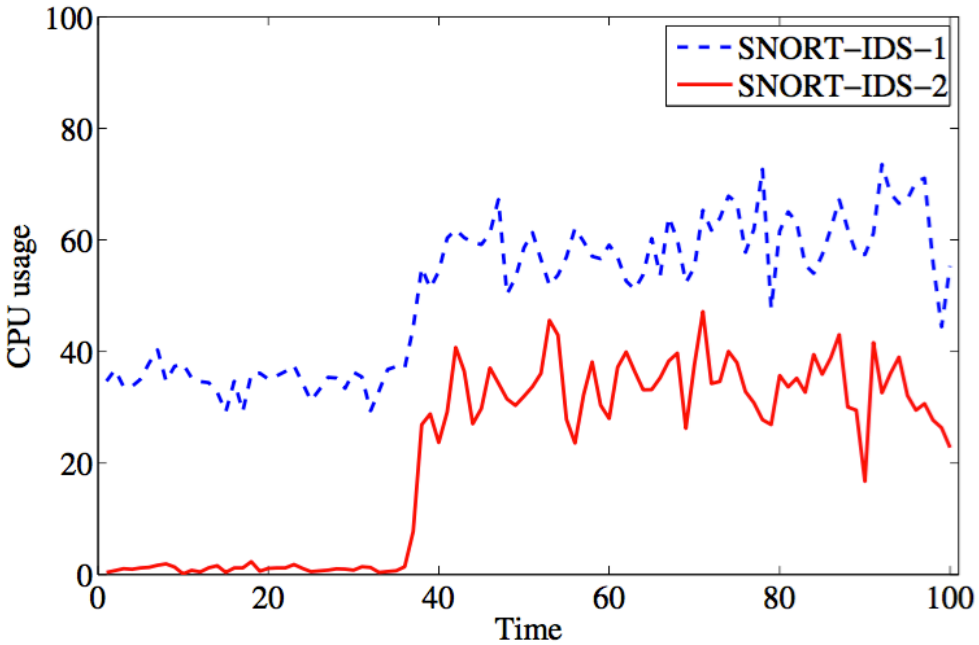

Simple Round Robin load balancing

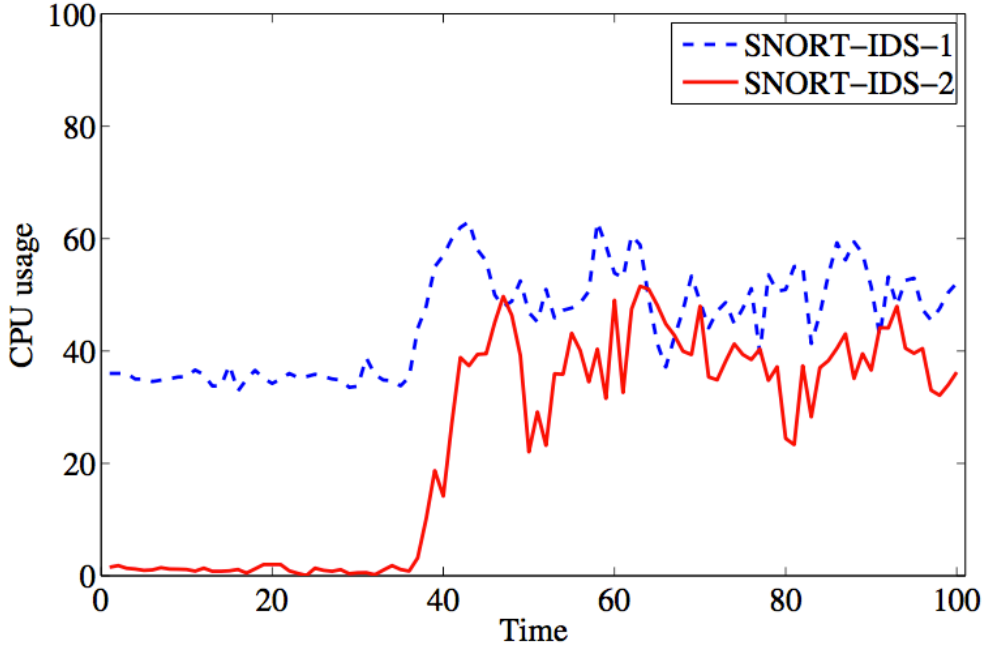

Load balancing based on PI control (T = 50%)

Scaling

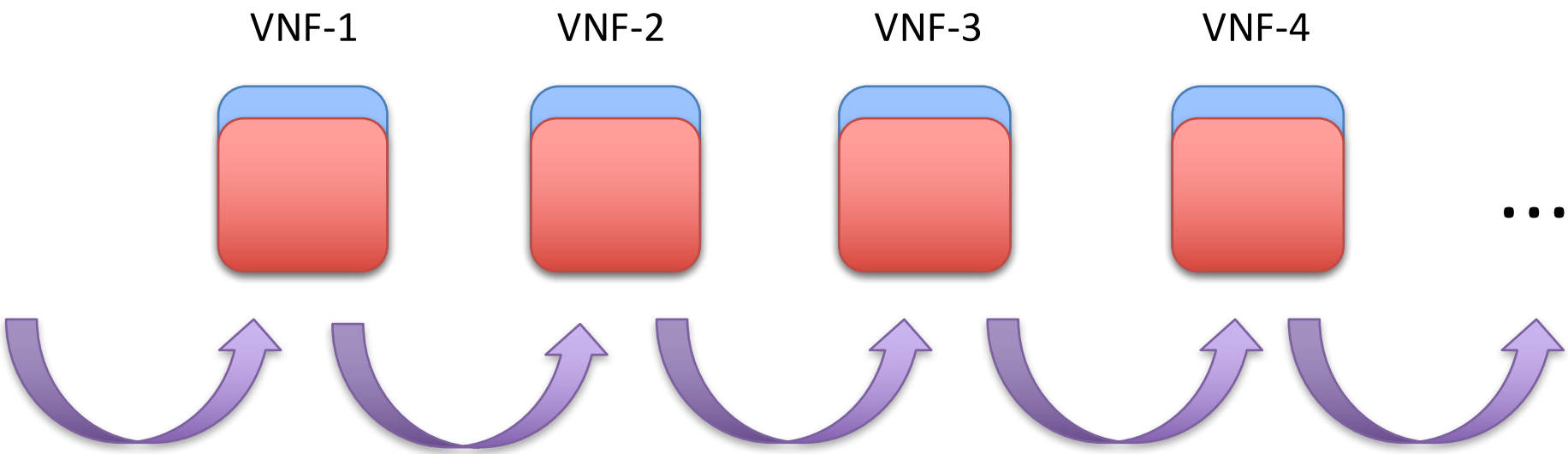

BOSTON UNIVERSITY

DEMO

BOSTON UNIVERSITY

Conclusion

- First work that combines Control Theory with SDN/NFV management
- Control Theory can play crucial role in SDN/NFV management
- Use case: Load balancer for IDS (VNF)
  - GENI test-bed is used for realistic experimentation
  - RINA based distributed application is used for monitoring
  - PI-Controller
  - Scaling

Tutorial to reproduce results:
http://csr.bu.edu/rina/grw-bu2016/nfv.htm